# GuitarAmplifierPCBs.com

# 18 Watt LiteIIb "Baby Will" (Version 2.3)

## Chassis Layout
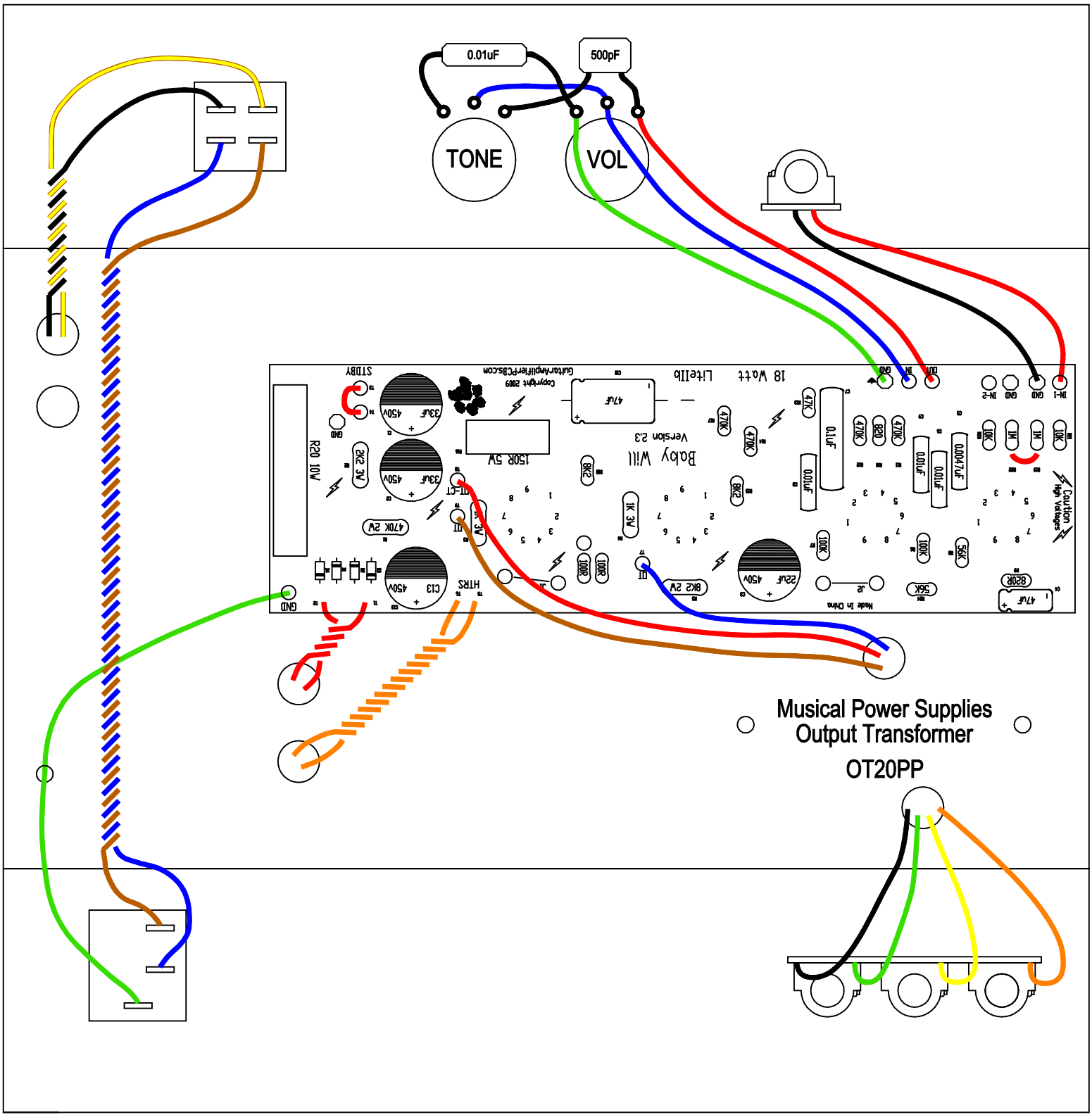
## Valve Junior v2 and v3 Chassis